N69200H Series High Performance High Power Programmable DC Electronic Load

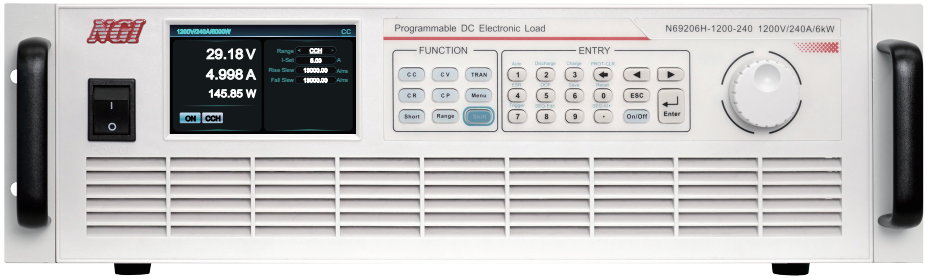

Product Introduction

The N69200H series is a high-reliability, high-precision, multi-functional, high-performance programmable DC electronic load. It is available in three voltage specifications: 150V, 600V, and 1200V. Packaged in a standard 19inch 3U chassis, the series delivers up to 6kW of power per unit. Fiber-optic paralleling is supported, enabling power expansion through both master-master and master-slave configurations.

Compared to the standard N69200 series, the H version features faster current slew rates, higher voltage and current accuracy, and supports a wide-range AC input voltage. The N69200H series offers a variety of operating modes, including sequence testing, dynamic testing, discharge testing, charge testing, OCP/OPP testing, short-circuit simulation, optional DC internal resistance (DCIR) testing, and arbitrary waveform loading. These capabilities make the series widely suitable for test applications such as AI server power supplies, power modules, fuel cells, and EV charging stations, establishing the N69200H as a trusted solution for R&D validation and ATE systems.

Application Fields

- DC Power Supplies: AI server power supplies, high-voltage switching power supplies, industrial power supplies, communication power supplies, etc.
- New Energy: Fuel cell stacks and engines, lithium battery packs, supercapacitors, photovoltaic modules, etc.
- Power Electronics: UPS power supplies, DC-DC converters, on-board chargers (OBC), etc.
- Power Supply Systems: Generator sets, energy storage systems, DC charging stations, etc.
- High-Power DC Components: Contactors/relays, automotive high-voltage components, etc.
- Other Industries: Electric vehicles, semiconductors, aerospace, etc.

Main Features

- Single-unit input power: 2kW to 60kW, with 6kW in 3U ultra-high power density
- Voltage ranges: 0–150V / 0–600V / 0–1200V
- Master/slave parallel control support: Power expansion via master-master or master-slave configurations
- Current range: Up to 2500A
- Single-unit dynamic current slew rate up to 100 A/μs.
- Built-in test functions: Sequence test, discharge test, charge test, OCP/OPP test, short-circuit simulation
- 8 operating modes: CC, CV, CP, CR, CV+CC, CR+CC, CV+CR, CP+CC
- Three ranges for CV, CC, CP, CR: Wide measurement range
- Voltage measurement accuracy: 0.015% + 0.01% of F.S.
- Current measurement accuracy: 0.03% + 0.02% of F.S.
- Short-term overload capability: 2×rated power for <3 seconds
- Adjustable CV loop speed: Matches various power supply types
- Analog I/O features: Current monitor output, external programming input, external trigger input; supports 20 kHz sine wave programming input
- Time measurement accuracy: 10μs for rise/fall time measurements
- High-speed dynamic mode: 30kHz, with variable frequency sweep
- μs fast dynamic response and slew rate loading
- Arbitrary waveform loading: Sine wave up to 20kHz; supports waveform import via USB drive
- Optional DC internal resistance (DCIR) test [1]

- Optional NP101 series module: Enables zero-voltage loading capability【2】
- Soft power-on/off function: Current oscillation protection
- Programmable protection: Overcurrent, overvoltage, overpower, reverse connection detection, and overtemperature protection
- 100 sets of power-off save memory: Allows quick recall of stored settings
- Communication interfaces: LAN, RS232, CAN; optional GPIB
- MPPT function: Maximum power point tracking

Note【1】: Available only for models with voltage rating ≤600V.
Note【1】: The MPPT function is available only for select 150V models.

3U/6kW, ultra-high power density

N69200H is designed with high power density. Power of 19” 3U chassis can be up to 6kW. The volume and weight are half of traditional electronic loads. Compared with traditional electronic loads with the same power, N69200H is smaller in size and lighter in weight.



Parallel connection for power extension

The N69200H Series supports master/slave parallel operation with active current sharing. When load power demand increases, all models of the same voltage rating can achieve the required current and power through parallel configuration (Master + Master, Master + Slave). When using the N69200H Series products, users only need to program the load current on the master unit; the slave units will automatically distribute the current, further simplifying user operation procedures.

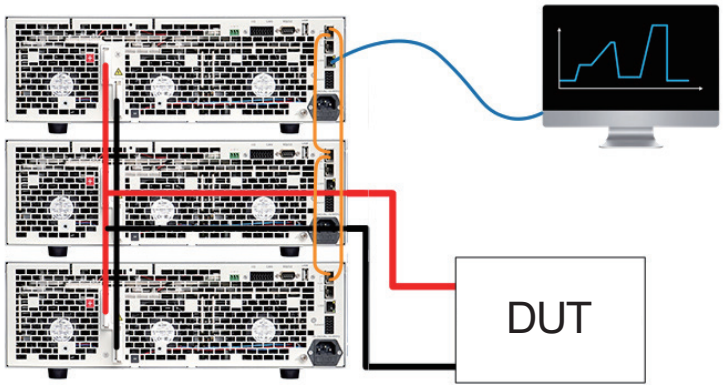

▲Master+Master Parallel Connection Diagram

Multiple operating modes for multiple test scenarios

N69200H supports four normal working modes: CC, CV, CP, and CR. In order to cope with the change of load characteristics in the actual test process, N69200H has also been developed with CV+CC, CR+CC, CV+CR, CP+CC four combined working modes. For example, CR+CC is suitable for the startup test of power supply to prevent overcurrent protection when the power supply is turned on. CV+CR can replace the setting application of Von point. CV+CC can simulate the working mode transition process of battery charging. Users can choose different working modes for test according to their actual situation.

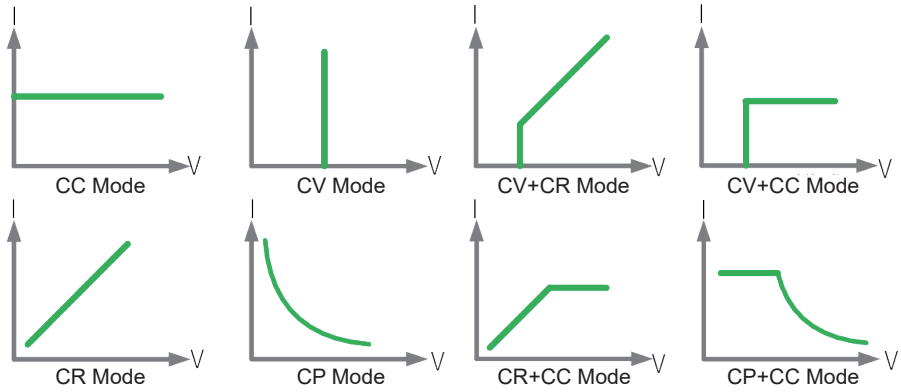

High speed dynamic mode, with dynamic frequency sweep

N69200H has a high-speed dynamic mode. The dynamic characteristics of the DC power supply can be tested by simulating the dynamic load behavior of the power supply through the dynamic mode. N69200H provides dynamic frequency sweep and programmable dynamic mode up to 30kHz, including CCD constant current dynamic, CVD constant voltage dynamic, CRD constant resistance dynamic, and CPD constant power dynamic. Programmable dynamic load mode allows setting of high/low range, rise/fall slew rate, pulse width and operation mode. The voltage and current sampling rate of dynamic frequency sweep mode is 500kHz. It supports linearly changing the frequency of the load current. Frequency is up to 30kHz. This mode can measure the peak voltage Vpk+, valley voltage Vpk- and occurrence frequency points of the DUT during the dynamic frequency load change process.

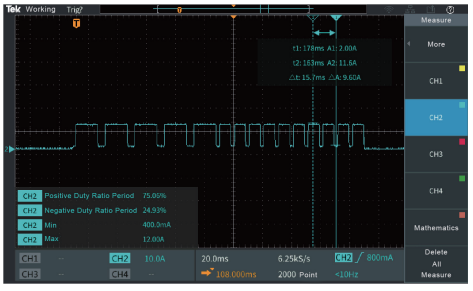

▲ Sweep Mode

Charge/discharge test, built-in battery test mode

Users can set different conditions on the front panel to meet their test demands. For example, when battery voltage is lower than initial voltage, N69200H internal counter will start counting. The counter will stop working until the battery voltage drops to cut-off voltage.

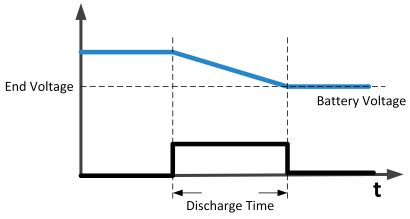

▲ Discharge Test Graph

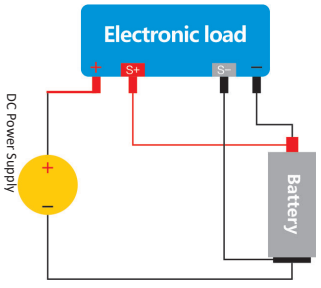

▲ Charge Wiring

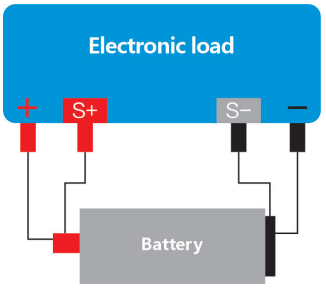

▲ Discharge Wiring

OCP (over current protection) test

During OCP test, N69200H will load under CC mode and check whether the DUT voltage is lower than cut-off voltage. If lower, N69200H will record the present loading current as the test result and shut the input to stop the test. If the DUT voltage is higher than cut-off voltage, N69200H will increase the loading current until the DUT voltage is lower than cut-off voltage or it reaches the Max. loading current.

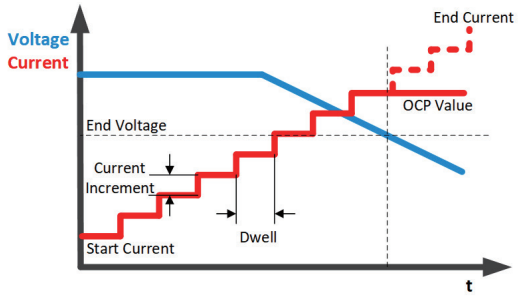

▲OCP Test Diagram

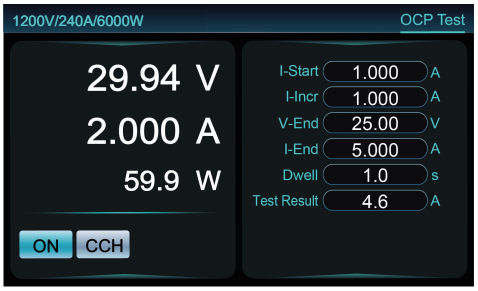

▲OCP Test Interface

Equivalent Series Resistance (ESR) test (Optional)

ESR is a principal parameter of battery or supercapacitor. N69200H series offers professional ESR measurement function, which can support multiple measurement standards, and possess the advantages of accurate results and stable repeated results.

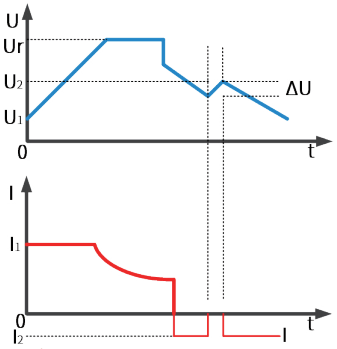

▲ESR Test schematic diagram

Quick Selection

150V Model	Specification	Size
N69202H-150-200	2kW/150V/200A	3U
N69204H-150-400	4kW/150V/400A	3U
N69206H-150-600	6kW/150V/600A	3U
N69212H-150-1200	12kW/150V/1200A	6U
N69218H-150-1800	18kW/150V/1800A	9U
N69224H-150-2400	24kW/150V/2400A	12U
N69230H-150-2500	30kW/150V/2500A	22U
N69236H-150-2500	36kW/150V/2500A	22U
N69242H-150-2500	42kW/150V/2500A	22U
N69248H-150-2500	48kW/150V/2500A	32U
N69254H-150-2500	54kW/150V/2500A	32U
N69260H-150-2500	60kW/150V/2500A	32U

600V Model	Specification	Size
N69202H-600-140	2kW/600V/140A	3U
N69204H-600-280	4kW/600V/280A	3U
N69206H-600-420	6kW/600V/420A	3U
N69212H-600-840	12kW/600V/840A	6U
N69218H-600-1260	18kW/600V/1260A	9U
N69224H-600-1680	24kW/600V/1680A	12U
N69230H-600-2100	30kW/600V/2100A	22U
N69236H-600-2500	36kW/600V/2500A	22U
N69242H-600-2500	42kW/600V/2500A	22U
N69248H-600-2500	48kW/600V/2500A	32U
N69254H-600-2500	54kW/600V/2500A	32U
N69260H-600-2500	60kW/600V/2500A	32U

1200V Model	Specification	Size
N69202H-1200-80	2kW/1200V/80A	3U
N69204H-1200-160	4kW/1200V/160A	3U
N69206H-1200-240	6kW/1200V/240A	3U
N69212H-1200-480	12kW/1200V/480A	6U
N69218H-1200-720	18kW/1200V/720A	9U
N69224H-1200-960	24kW/1200V/960A	12U
N69230H-1200-1200	30kW/1200V/1200A	22U
N69236H-1200-1440	36kW/1200V/1440A	22U
N69242H-1200-1680	42kW/1200V/1680A	22U
N69248H-1200-1920	48kW/1200V/1920A	32U
N69254H-1200-2160	54kW/1200V/2160A	32U
N69260H-1200-2400	60kW/1200V/2400A	32U

0V with Load Selection

Model	Module	Size	Model	Module	Size
N69206H-150-600	NP101-600	6U	N69210H-150-1000	NP101-1000	9U
N69208H-150-800	NP101-800	9U	N69212H-150-1200	NP101-1200	9U

*N69200H series supports parallel power expansion, for more power product selection, please contact us

Product Dimension

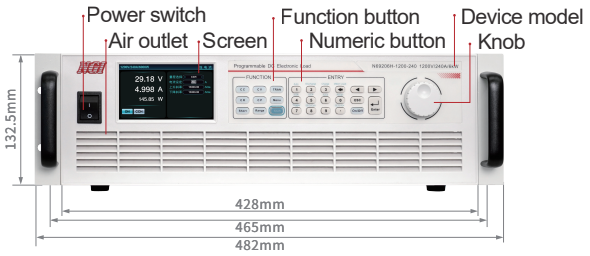

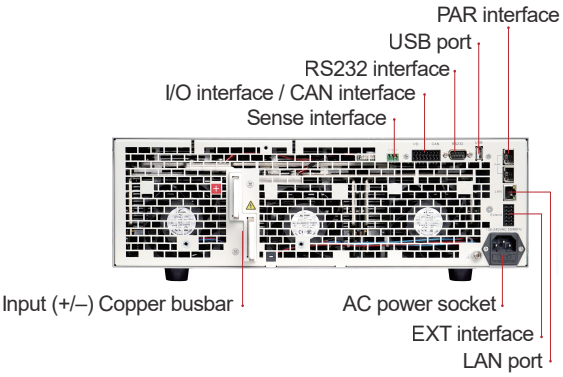

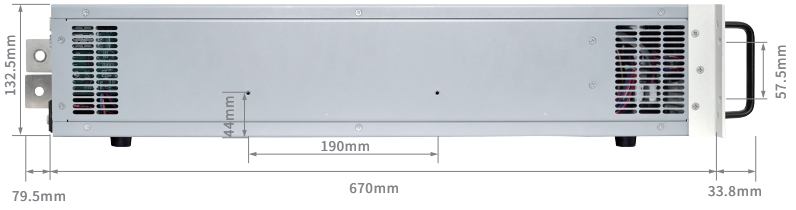

Technical Data Sheet(1)

Model	N69202H-150-200			N69202H-600-140			N69202H-1200-80		
Voltage	0~150 V			0~600 V			0~1200 V		
Current	200A			140A			80A		
Power	2 kW			2 kW			2 kW		
Min. Operating Voltage	0.85 V/200 A			15 V/140 A			25 V/80 A		
CV Mode									
Range	0~15V	0~75V	0~150V	0~60V	0~300V	0~600V	0~120V	0~600V	0~1200V
Setting Resolution	1mV	1mV	10mV	1mV	10mV	10mV	10mV	10mV	100mV
Setting Accuracy (23±5℃)	0.02%+0.01%F.S.								
Readback Resolution	0.1mV	0.1mV	1mV	0.1mV	1mV	1mV	1mV	1mV	10mV
Readback Accuracy (23±5℃)	0.015%+0.01%F.S.								
CC Mode									
Range	0~20A	0~100A	0~200A	0~14A	0~70A	0~140A	0~8A	0~40A	0~80A
Setting Resolution	1mA	10mA	10mA	1mA	1mA	10mA	0.1mA	1mA	1mA
Setting Accuracy (23±5℃)	0.03%+0.02%F.S.								
Readback Resolution	0.1mA	1mA	1mA	0.1mA	0.1mA	1mA	0.01mA	0.1mA	0.1mA
Readback Accuracy (23±5℃)	0.03%+0.02%F.S.								
CP Mode									
Range	0~0.2 kW	0~1 kW	0~2 kW	0~0.2 kW	0~1 kW	0~2 kW	0~0.2 kW	0~1 kW	0~2 kW
Setting Resolution	0.01W	0.1W	0.1W	0.01W	0.1W	0.1W	0.01W	0.1W	0.1W
Setting Accuracy (23±5℃)	0.2%+0.2%F.S.								
Readback Resolution	0.001W	0.01W	0.01W	0.001W	0.01W	0.01W	0.001W	0.01W	0.01W
Readback Accuracy (23±5℃)	0.1%+0.1%F.S.								
CR Mode									
Range	0.1Ω~3750Ω	0.01Ω~750Ω	0.01Ω~375Ω	2Ω~21429Ω	0.3Ω~4286Ω	0.2Ω~2143Ω	4Ω~75000Ω	1Ω~15000Ω	0.4Ω~7500Ω
Setting Resolution	0.1Ω	0.01Ω	0.01Ω	1Ω	0.1Ω	0.1Ω	1Ω	1Ω	0.1Ω
Setting Accuracy (23±5℃)	(Vin/Rset)*0.05%+0.05%IF.S.								
Slew Rate									
Current	0.001~2000A/ms	0.001~7000A/ms	0.001~14000A/ms	0.001~700A/ms	0.001~3500A/ms	0.001~7000A/ms	0.001~434A/ms	0.001~2167A/ms	0.001~4334A/ms
Power	0.001~2000A/ms	0.001~7000A/ms	0.001~14000A/ms	0.001~700A/ms	0.001~3500A/ms	0.001~7000A/ms	0.001~434A/ms	0.001~2167A/ms	0.001~4334A/ms
Resistance	0.001~2000A/ms	0.001~7000A/ms	0.001~14000A/ms	0.001~700A/ms	0.001~3500A/ms	0.001~7000A/ms	0.001~434A/ms	0.001~2167A/ms	0.001~4334A/ms
CCD Mode									
T1&T2	0.025 ms~60000 ms (Time units are switchable, e.g., ms/s)								
Resolution	1μs								
Accuracy (23±5℃)	10μs+100ppm								
Rise/Fall Slew Rate	0.001~2000A/ms	0.001~7000A/ms	0.001~14000A/ms	0.001~700A/ms	0.001~3500A/ms	0.001~7000A/ms	0.001~434A/ms	0.001~2167A/ms	0.001~4334A/ms
Min. Rise Time	10μs								
Others									
Interface	USB (waveform import only)/LAN/RS232/CAN								
Communication Protocol	Modbus-RTU standard protocol, CANOPEN standard protocol, SCPI standard protocol								
Communication Response Time	≤5ms								
AC Input	Voltage 100~240V AC, current ＜ 2A, frequency 47Hz~63Hz								
Temperature	Operating temperature: 0℃~40℃, storage temperature: -20℃~60℃								
Operating Environment	Altitude <2000m, relative humidity: 5%~90%RH(non-condensing), atmospheric pressure: 80~110kPa								
Dimension	132.5 mm×482 mm×783.2 mm (H × W × D, including the output shield)								
Net Weight	22kg								

Note 1: For other specifications, please contact NGI.
Note 2: All specifications are subject to change without notice.

Technical Data Sheet(2)

Model	N69204H-150-400			N69204H-600-280			N69204H-1200-160		
Voltage	0~150 V			0~600 V			0~1200 V		
Current	400A			280A			160A		
Power	4 kW			4 kW			4 kW		
Min. Operating Voltage	0.85 V/400 A			15 V/280 A			25 V/160 A		
CV Mode									
Range	0~15V	0~75V	0~150V	0~60V	0~300V	0~600V	0~120V	0~600V	0~1200V
Setting Resolution	1mV	1mV	10mV	1mV	10mV	10mV	10mV	10mV	100mV
Setting Accuracy (23±5℃)	0.02%+0.01%F.S.								
Readback Resolution	0.1mV	0.1mV	1mV	0.1mV	1mV	1mV	1mV	1mV	10mV
Readback Accuracy (23±5℃)	0.015%+0.01%F.S.								
CC Mode									
Range	0~40A	0~200A	0~400A	0~28A	0~140A	0~280A	0~16A	0~80A	0~160A
Setting Resolution	1mA	10mA	10mA	1mA	10mA	10mA	1mA	1mA	10mA
Setting Accuracy (23±5℃)	0.03%+0.02%F.S.								
Readback Resolution	0.1mA	1mA	1mA	0.1mA	0.1mA	1mA	0.01mA	0.1mA	1mA
Readback Accuracy (23±5℃)	0.03%+0.02%F.S.								
CP Mode									
Range	0~0.4 kW	0~2 kW	0~4 kW	0~0.4 kW	0~2 kW	0~4 kW	0~0.4 kW	0~2 kW	0~4 kW
Setting Resolution	0.01W	0.1W	0.1W	0.01W	0.1W	0.1W	0.01W	0.1W	0.1W
Setting Accuracy (23±5℃)	0.2%+0.2%F.S.								
Readback Resolution	0.001W	0.01W	0.01W	0.001W	0.01W	0.01W	0.001W	0.01W	0.01W
Readback Accuracy (23±5℃)	0.1%+0.1%F.S.								
CR Mode									
Range	0.1Ω~1875Ω	0.01Ω~375Ω	0.01Ω~188Ω	1Ω~10715Ω	0.2Ω~2143Ω	0.1Ω~1072Ω	2Ω~37500Ω	0.4Ω~7500Ω	0.2Ω~3750Ω
Setting Resolution	0.1Ω	0.01Ω	0.01Ω	1Ω	0.1Ω	0.1Ω	1Ω	0.1Ω	0.1Ω
Setting Accuracy (23±5℃)	(Vin/Rset)*0.05%+0.05%IF.S.								
Slew Rate									
Current	0.001~4000A/ms	0.001~14000A/ms	0.001~28000A/ms	0.001~1400A/ms	0.001~7000A/ms	0.001~14000A/ms	0.001~867A/ms	0.001~4334A/ms	0.001~8667A/ms
Power	0.001~4000A/ms	0.001~14000A/ms	0.001~28000A/ms	0.001~1400A/ms	0.001~7000A/ms	0.001~14000A/ms	0.001~867A/ms	0.001~4334A/ms	0.001~8667A/ms
Resistance	0.001~4000A/ms	0.001~14000A/ms	0.001~28000A/ms	0.001~1400A/ms	0.001~7000A/ms	0.001~14000A/ms	0.001~867A/ms	0.001~4334A/ms	0.001~8667A/ms
CCD Mode									
T1&T2	0.025 ms~60000 ms (Time units are switchable, e.g., ms/s)								
Resolution	1μs								
Accuracy (23±5℃)	10μs+100ppm								
Rise/Fall Slew Rate	0.001~4000A/ms	0.001~14000A/ms	0.001~28000A/ms	0.001~1400A/ms	0.001~7000A/ms	0.001~14000A/ms	0.001~867A/ms	0.001~4334A/ms	0.001~8667A/ms
Min. Rise Time	10μs								
Others									
Interface	USB (waveform import only)/LAN/RS232/CAN								
Communication Protocol	Modbus-RTU standard protocol, CANOPEN standard protocol, SCPI standard protocol								
Communication Response Time	≤5ms								
AC Input	Voltage 100~240V AC, current ＜ 2A, frequency 47Hz~63Hz								
Temperature	Operating temperature: 0℃~40℃, storage temperature: -20℃~60℃								
Operating Environment	Altitude <2000m, relative humidity: 5%~90%RH(non-condensing), atmospheric pressure: 80~110kPa								
Dimension	132.5 mm×482 mm×783.2 mm (H × W × D, including the output shield)								
Net Weight	30kg								

Note 1: For other specifications, please contact NGI.
Note 2: All specifications are subject to change without notice.

Technical Data Sheet(3)

Model	N69206H-150-600		
Voltage	0~150V		
Current	600A		
Power	6kW		
Min. Operating Voltage	0.85V/600A		
CV Mode			
Range	0~15V	0~75V	0~150V
Setting Resolution	1mV	1mV	10mV
Setting Accuracy (23±5℃)	0.02%+0.01%F.S.		
Readback Resolution	0.1mV	0.1mV	1mV
Readback Accuracy (23±5℃)	0.015%+0.01%F.S.		
CC Mode			
Range	0~60A	0~300A	0~600A
Setting Resolution	1mA	10mA	10mA
Setting Accuracy (23±5℃)	0.03%+0.02%F.S.		
Readback Resolution	0.1mA	1mA	1mA
Readback Accuracy (23±5℃)	0.03%+0.02%F.S.		
CP Mode			
Range	0~0.6kW	0~3kW	0~6kW
Setting Resolution	0.01W	0.1W	0.1W
Setting Accuracy (23±5℃)	0.2%+0.2%F.S.		
Readback Resolution	0.001W	0.01W	0.01W
Readback Accuracy (23±5℃)	0.1%+0.1%F.S.		
CR Mode			
Range	0.1Ω~1250Ω	0.021Ω~250Ω	0.01Ω~125Ω
Setting Resolution	0.1Ω	0.01Ω	0.01Ω
Setting Accuracy (23±5℃)	(Vin/Rset)*0.05%+0.05%IF.S.		
Slew Rate			
Current	0.001~6000A/ms	0.001~21000A/ms	0.001~42000A/ms
Power	0.001~6000A/ms	0.001~21000A/ms	0.001~42000A/ms
Resistance	0.001~6000A/ms	0.001~21000A/ms	0.001~42000A/ms
CCD Mode			
T1&T2	0.025ms~60000ms (time units can be switched, e.g., ms/s)		
Resolution	1μs		
Accuracy (23±5℃)	10μs+100ppm		
Rise/Fall Slew Rate	0.001~6000A/ms	0.001~21000A/ms	0.001~42000A/ms
Min. Rise Time	10μs		
Others			
Input Impedance	0.3MΩ(Typical)		
Interface	USB(Waveform import)/LAN/RS232/CAN		
Communication Protocol	Modbus-RTU standard protocol, CANOPEN standard protocol, SCPI standard protocol		
Communication Response Time	≤5ms		
AC Input	Voltage 100~240V AC, current ＜ 2A, frequency 47Hz~63Hz		
Temperature	Operating temperature: 0℃~40℃, storage temperature: -20℃~60℃		
Operating Environment	Altitude <2000m, relative humidity: 5%~90%RH(non-condensing), atmospheric pressure: 80~110kPa		
Net Weight	Approx. 37.15kg		
Dimension	3U, 132.5(H)*482.0(W)with handle*783.2D)mm		

Note 1: For other specifications, please contact NGI.
Note 2: All specifications are subject to change without notice.

Technical Data Sheet(4)

Model	N69206H-600-420		
Voltage	0~600V		
Current	420A		
Power	6kW		
Min. Operating Voltage	4.2V/420A		
CV Mode			
Range	0~60V	0~300V	0~600V
Setting Resolution	1mV	10mV	10mV
Setting Accuracy (23±5℃)	0.02%+0.01%F.S.		
Readback Resolution	0.1mV	1mV	1mV
Readback Accuracy (23±5℃)	0.015%+0.01%F.S.		
CC Mode			
Range	0~42A	0~210A	0~420A
Setting Resolution	1mA	10mA	10mA
Setting Accuracy (23±5℃)	0.03%+0.02%F.S.		
Readback Resolution	0.1mA	1mA	1mA
Readback Accuracy (23±5℃)	0.03%+0.02%F.S.		
CP Mode			
Range	0~0.6kW	0~3kW	0~6kW
Setting Resolution	0.01W	0.1W	0.1W
Setting Accuracy (23±5℃)	0.2%+0.2%F.S.		
Readback Resolution	0.001W	0.01W	0.01W
Readback Accuracy (23±5℃)	0.1%+0.1%F.S.		
CR Mode			
Range	0.4Ω~7143Ω	0.1Ω~1429Ω	0.04Ω~715Ω
Setting Resolution	0.1Ω	0.1Ω	0.01Ω
Setting Accuracy (23±5℃)	(Vin/Rset)*0.05%+0.05%IF.S.		
Slew Rate			
Current	0.001~2100A/ms	0.001~10500A/ms	0.001~21000A/ms
Power	0.001~2100A/ms	0.001~10500A/ms	0.001~21000A/ms
Resistance	0.001~2100A/ms	0.001~10500A/ms	0.001~21000A/ms
CCD Mode			
T1&T2	0.025ms~60000ms (time units can be switched, e.g., ms/s)		
Resolution	1μs		
Accuracy (23±5℃)	10μs+100ppm		
Rise/Fall Slew Rate	0.001~2100A/ms	0.001~10500A/ms	0.001~21000A/ms
Min. Rise Time	15μs		
Others			
Input Impedance	1.1MΩ(Typical)		
Interface	USB(Waveform import)/LAN/RS232/CAN		
Communication Protocol	Modbus-RTU standard protocol, CANOPEN standard protocol, SCPI standard protocol		
Communication Response Time	≤5ms		
AC Input	Voltage 100~240V AC, current ＜ 2A, frequency 47Hz~63Hz		
Temperature	Operating temperature: 0℃~40℃, storage temperature: -20℃~60℃		
Operating Environment	Altitude <2000m, relative humidity: 5%~90%RH(non-condensing), atmospheric pressure: 80~110kPa		
Net Weight	Approx. 37.15kg		
Dimension	3U, 132.5(H)*482.0(W)with handle*783.2D)mm		

Note 1: For other specifications, please contact NGI.
Note 2: All specifications are subject to change without notice.

Technical Data Sheet(5)

Model	N69206H-1200-240		
Voltage	0~1200V		
Current	240A		
Power	6kW		
Min. Operating Voltage	25V/240A		
CV Mode			
Range	0~120V	0~600V	0~1200V
Setting Resolution	10mV	10mV	100mV
Setting Accuracy (23±5℃)	0.02%+0.01%F.S.		
Readback Resolution	1mV	1mV	10mV
Readback Accuracy (23±5℃)	0.015%+0.01%F.S.		
CC Mode			
Range	0~24A	0~120A	0~240A
Setting Resolution	1mA	10mA	10mA
Setting Accuracy (23±5℃)	0.03%+0.02%F.S.		
Readback Resolution	0.1mA	1mA	1mA
Readback Accuracy (23±5℃)	0.03%+0.02%F.S.		
CP Mode			
Range	0~0.6kW	0~3kW	0~6kW
Setting Resolution	0.01W	0.1W	0.1W
Setting Accuracy (23±5℃)	0.2%+0.2%F.S.		
Readback Resolution	0.001W	0.01W	0.01W
Readback Accuracy (23±5℃)	0.1%+0.1%F.S.		
CR Mode			
Range	2Ω~25000Ω	0.3Ω~5000Ω	0.2Ω~2500Ω
Setting Resolution	1Ω	0.1Ω	0.1Ω
Setting Accuracy (23±5℃)	(Vin/Rset)*0.05%+0.05%IF.S.		
Slew Rate			
Current	0.001~1300A/ms	0.001~6500A/ms	0.001~13000A/ms
Power	0.001~1300A/ms	0.001~6500A/ms	0.001~13000A/ms
Resistance	0.001~1300A/ms	0.001~6500A/ms	0.001~13000A/ms
CCD Mode			
T1&T2	0.025ms~60000ms (time units can be switched, e.g., ms/s)		
Resolution	1μs		
Accuracy (23±5℃)	1μs+100ppm		
Rise/Fall Slew Rate	0.001~1300A/ms	0.001~6500A/ms	0.001~13000A/ms
Min. Rise Time	15μs		
Others			
Input Impedance	1.6MΩ(Typical)		
Interface	USB(Waveform import)/LAN/RS232/CAN		
Communication Protocol	Modbus-RTU standard protocol, CANOPEN standard protocol, SCPI standard protocol		
Communication Response Time	≤5ms		
AC Input	Voltage 100~240V AC, current ＜ 2A, frequency 47Hz~63Hz		
Temperature	Operating temperature: 0℃~40℃, storage temperature: -20℃~60℃		
Operating Environment	Altitude <2000m, relative humidity: 5%~90%RH(non-condensing), atmospheric pressure: 80~110kPa		
Net Weight	Approx. 37.15kg		
Dimension	3U, 132.5(H)*482.0(W)with handle*783.2(D)mm		

Note 1: For other specifications, please contact NGI.
Note 2: All specifications are subject to change without notice.